SIEMENS

Data sheet 3RW4036-1BB14

SIRIUS soft starter S2 45 A, 22 kW/400 V, 40 °C 200-480 V AC, 110-230 V AC/DC Screw terminals

General technical data		
product brand name		SIRIUS
product feature		
● integrated bypass contact system		Yes
● thyristors		Yes
product function		
● intrinsic device protection		Yes
● motor overload protection		Yes
● evaluation of thermistor motor protection		No
● external reset		Yes
● adjustable current limitation		Yes
● inside-delta circuit		No
product component motor brake output		No
insulation voltage rated value	V	600
degree of pollution		3, acc. to IEC 60947-4-2
reference code according to EN 61346-2		Q
reference code according to DIN 40719 extended according to IEC 204-2 according to IEC 750		G
Power Electronics		
product designation		Soft starter
operational current		
● at 40 °C rated value	A	45
● at 50 °C rated value	A	42
● at 60 °C rated value	A	39
yielded mechanical performance for 3-phase motors		
● at 230 V		
— at standard circuit at 40 °C rated value	kW	11
● at 400 V		
— at standard circuit at 40 °C rated value	kW	22
yielded mechanical performance [hp] for 3-phase AC motor at 200/208 V at standard circuit at 50 °C rated value	hp	10
operating frequency rated value	Hz	50 ... 60
relative negative tolerance of the operating frequency	%	-10
relative positive tolerance of the operating frequency	%	10
operating voltage at standard circuit rated value	V	200 ... 480
relative negative tolerance of the operating voltage at standard circuit	%	-15
relative positive tolerance of the operating voltage at standard circuit	%	10
minimum load [%]	%	20

Subject to change without notice
© Copyright Siemens

adjustable motor current for motor overload protection minimum rated value	A	23
continuous operating current [% of Ie] at 40 °C	%	115
power loss [W] at operational current at 40 °C during operation typical	W	6
Control circuit/ Control		
type of voltage of the control supply voltage		AC/DC
control supply voltage frequency 1 rated value	Hz	50
control supply voltage frequency 2 rated value	Hz	60
relative negative tolerance of the control supply voltage frequency	%	-10
relative positive tolerance of the control supply voltage frequency	%	10
control supply voltage 1 at AC at 50 Hz	V	110 ... 230
control supply voltage 1 at AC at 60 Hz	V	110 ... 230
relative negative tolerance of the control supply voltage at AC at 50 Hz	%	-15
relative positive tolerance of the control supply voltage at AC at 50 Hz	%	10
relative negative tolerance of the control supply voltage at AC at 60 Hz	%	-15
relative positive tolerance of the control supply voltage at AC at 60 Hz	%	10
control supply voltage 1 at DC	V	110 ... 230
relative negative tolerance of the control supply voltage at DC	%	-15
relative positive tolerance of the control supply voltage at DC	%	10
display version for fault signal		red
Mechanical data		
size of engine control device		S2
width	mm	55
height	mm	160
depth	mm	170
fastening method		screw and snap-on mounting
mounting position		With additional fan: With vertical mounting surface +/-90° rotatable, with vertical mounting surface +/- 22.5° tiltable to the front and back Without additional fan: With vertical mounting surface +/-10° rotatable, with vertical mounting surface +/- 10° t
required spacing with side-by-side mounting		
● upwards	mm	60
● at the side	mm	30
● downwards	mm	40
wire length maximum	m	300
number of poles for main current circuit		3
Connections/ Terminals		
type of electrical connection		
● for main current circuit		screw-type terminals
● for auxiliary and control circuit		screw-type terminals
number of NC contacts for auxiliary contacts		0
number of NO contacts for auxiliary contacts		2
number of CO contacts for auxiliary contacts		1
type of connectable conductor cross-sections for main contacts for box terminal using the front clamping point		
● solid		2x (1.5 ... 16 mm²)
● finely stranded with core end processing		0.75 ... 25 mm²
● stranded		0.75 ... 35 mm²
type of connectable conductor cross-sections for main contacts for box terminal using the back clamping point		
● solid		2x (1.5 ... 16 mm²)
● finely stranded with core end processing		1.5 ... 25 mm²

Subject to change without notice
© Copyright Siemens

● stranded		1.5 ... 35 mm²
type of connectable conductor cross-sections for main contacts for box terminal using both clamping points		
● solid		2x (1.5 ... 16 mm²)
● finely stranded with core end processing		2x (1.5 ... 16 mm²)
● stranded		2x (1.5 ... 25 mm²)
type of connectable conductor cross-sections at AWG cables for main contacts for box terminal		
● using the back clamping point		16 ... 2
● using the front clamping point		18 ... 2
● using both clamping points		2x (16 ... 2)
type of connectable conductor cross-sections for auxiliary contacts		
● solid		2x (0.5 ... 2.5 mm²)
● finely stranded with core end processing		2x (0.5 ... 1.5 mm²)
type of connectable conductor cross-sections at AWG cables		
● for auxiliary contacts		2x (20 ... 14)
● for auxiliary contacts finely stranded with core end processing		2x (20 ... 16)
Ambient conditions		
installation altitude at height above sea level	m	5 000
environmental category		
● during transport according to IEC 60721		2K2, 2C1, 2S1, 2M2 (max. fall height 0.3 m)
● during storage according to IEC 60721		1K6 (only occasional condensation), 1C2 (no salt mist), 1S2 (sand must not get inside the devices), 1M4
● during operation according to IEC 60721		3K6 (no formation of ice, no condensation), 3C3 (no salt mist), 3S2 (sand must not get into the devices), 3M6
ambient temperature		
● during operation	°C	-25 ... +60
● during storage	°C	-40 ... +80
derating temperature	°C	40
protection class IP on the front according to IEC 60529		IP20
touch protection on the front according to IEC 60529		finger-safe, for vertical contact from the front

Certificates/ approvals

General Product Approval					EMC
CSA	CCC	Confirmation	UL	EAC	RCM

For use in hazardous locations	Declaration of Conformity	Test Certificates		Marine / Shipping	
ATEX	EG-Konf.	Type Test Certificates/Test Report	Special Test Certificate	LRS	PRS

Marine / Shipping	other	Railway	
DNV·GL	Confirmation	Vibration and Shock	Confirmation

UL/CSA ratings

Subject to change without notice
© Copyright Siemens

yielded mechanical performance [hp] for 3-phase AC motor		
● **at 220/230 V**		
— at standard circuit at 50 °C rated value	hp	15
● **at 460/480 V**		
— at standard circuit at 50 °C rated value	hp	30
contact rating of auxiliary contacts according to UL		B300 / R300

Further information

Simulation Tool for Soft Starters (STS)
https://support.industry.siemens.com/cs/ww/en/view/101494917
Information- and Downloadcenter (Catalogs, Brochures,…)
https://www.siemens.com/ic10
Industry Mall (Online ordering system)
https://mall.industry.siemens.com/mall/en/en/Catalog/product?mlfb=3RW4036-1BB14
Cax online generator
http://support.automation.siemens.com/WW/CAXorder/default.aspx?lang=en&mlfb=3RW4036-1BB14
Service&Support (Manuals, Certificates, Characteristics, FAQs,...)
https://support.industry.siemens.com/cs/ww/en/ps/3RW4036-1BB14
Image database (product images, 2D dimension drawings, 3D models, device circuit diagrams, EPLAN macros, ...)
http://www.automation.siemens.com/bilddb/cax_de.aspx?mlfb=3RW4036-1BB14&lang=en

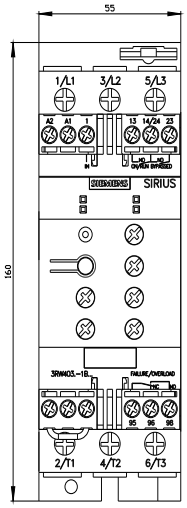

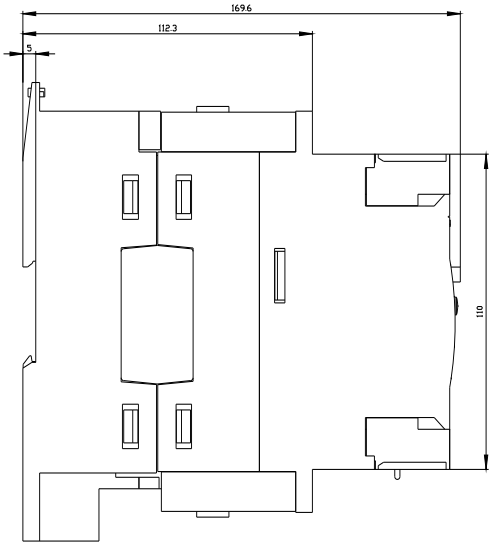

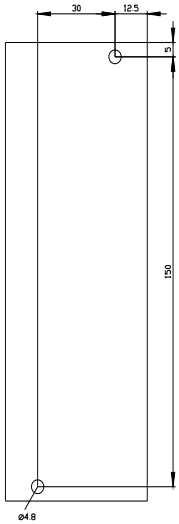

Subject to change without notice
© Copyright Siemens

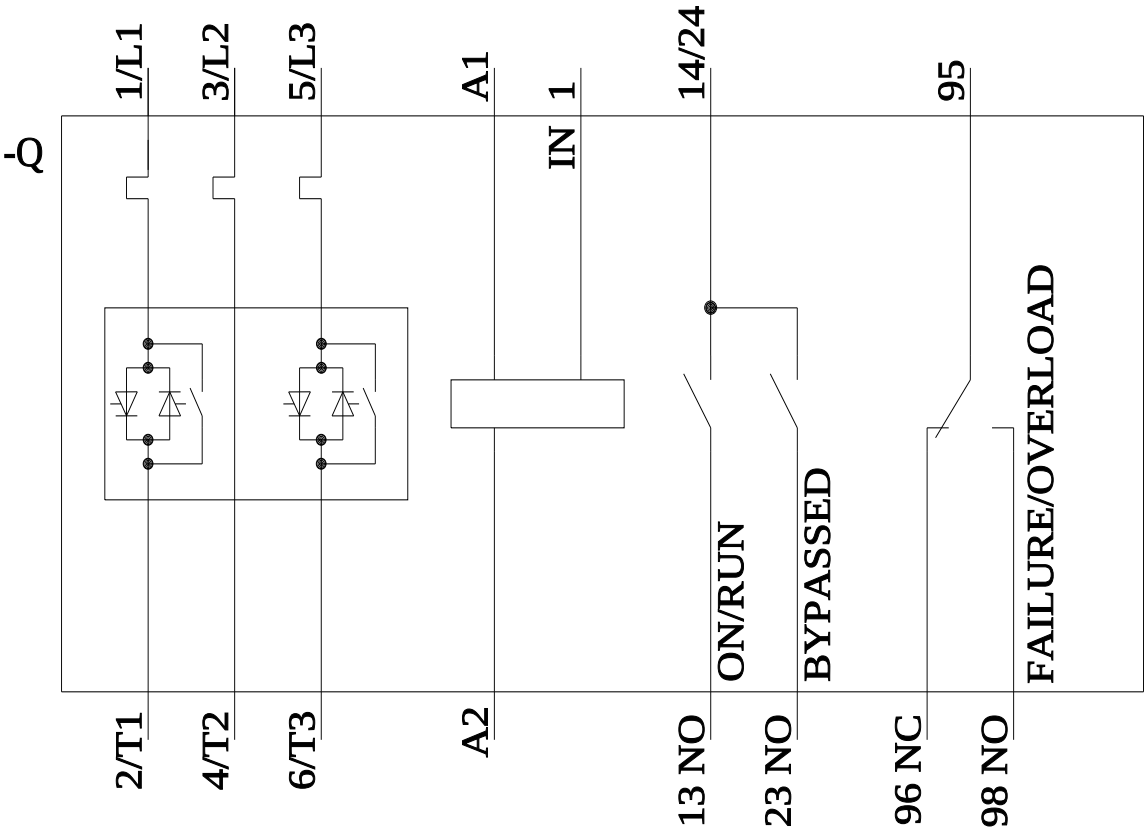

last modified: 1/16/2022

Subject to change without notice
© Copyright Siemens